HSF RoHS

FILE NO :E362810

SPECIFICATIONS
Rated Current:3.0AMP
Contact Resistance:20mΩ Max
Withstand Voltage:1000V AC/DC
Insulation Resistance:1000MΩ Min
Operation Temperature:−40°c to +105°c

Contact Material:Brass
Contact Plating:Au or Sn Over Ni
Insulator Material:Polyester(UL94V−0)
Standard: PBT
Max.Processing Temp: 180°C for 30−60 seconds
(200°C for 10 seconds)

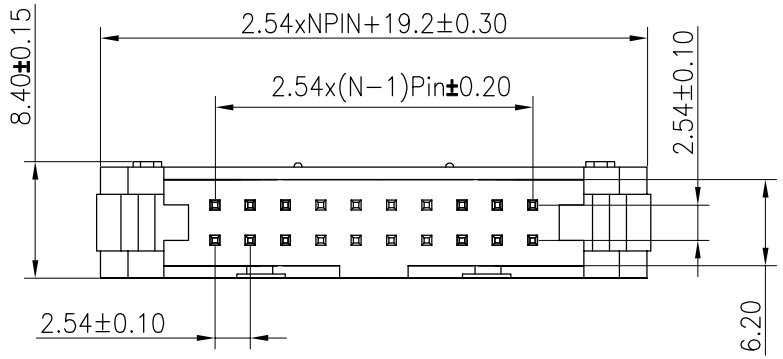

Recommended P.C.B Layout(Top Side)
(PCB BOARD TOLERANCE±0.05)

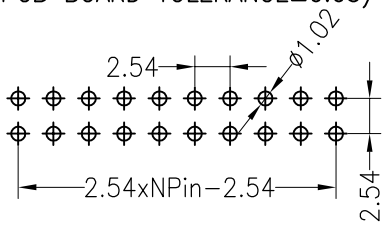

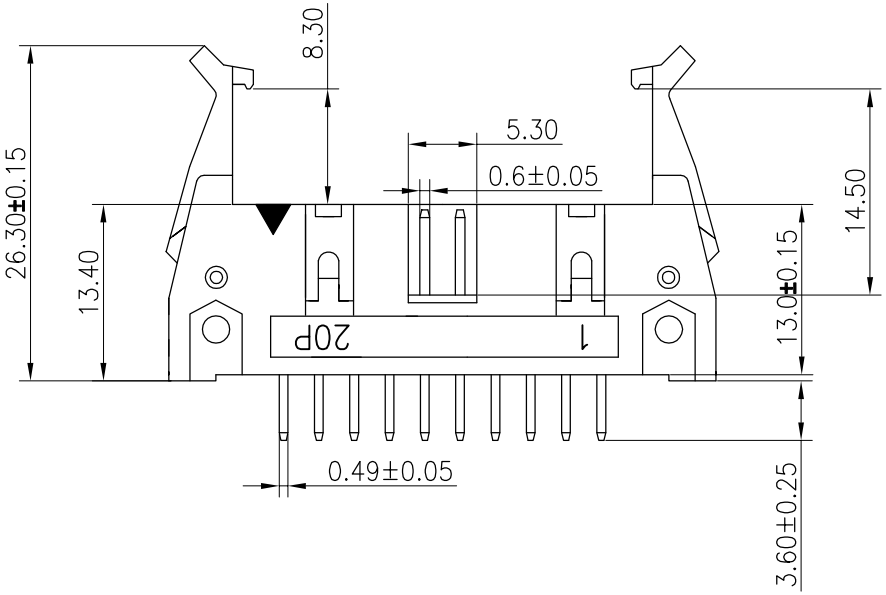

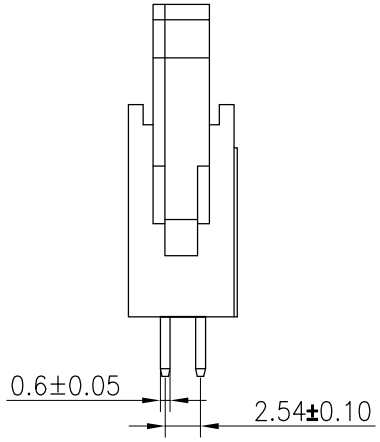

Ordering Information

3311 XX S XX A B L A 01

- No.of Pins: 6--64
- Contact Plating: G0:Gold Flash; G1:3U" Gold; G2:5U" Gold; G3:10U" Gold; G4:15U" Gold; G5:30U" Gold; S0:Gold Flash/Tin; SN:Tin; SM:Matte-Tin
- Insulator Material Option: A=BK-PBT; B=BK-PA66; C=BK-PA6T; D=BK-PA46; F=BK-PA9T; F=BK-LCP
- Color Type: B=Black; G=Grey
- Latch Type: L=Long Latch; S=Short Latch; N=Without Latch
- Packing: T=Tube; A=Tray; P=Tube+Cap

REV	DATE	MODIFICATION DESCRIPTION	CHANGE
B	2019.05.17	Change DRAWING	
A0	2013.10.10	NEW DRAWING	

OPERATION	
X.X	±0.30
X.XX	±0.20
X.XXX	±0.10
Angle	±3°
DIM	TOL

DRAW	yiyusheng	19.05.17
CHECK		
APPROVE		

SCALE	FIT
UNIT	mm
SIZE	A4
SHEET	1/1
PROJ.	

JILN® 深圳市锦凌电子有限公司
SHENZHEN JINLING ELECTRONIC CO.,LTD
Tel: 86-755-2997-5806/5802 Fax: 86-755-2997-5992

PART NO.	3311XXSXXABLA01
TITLE:	2.54牛角 Npin L16.5 180°(小耳扣带铁销) 缺口正向